Putzmeister BOOM PUMP ADVANTAGE

8

Better Boom Design

Lighter and more resilient, Putzmeister's "smart design" boom incorporates welding seams below the edge of maximum stress. The boom is engineered to offer the flexibility to adapt to different loads and features more straight pipe for a less stressful concrete flow and longer wear on parts. The Multi-Z configuration handles space restrictive areas and can pump even if the boom is not fully extended.

9

Modular Flatpack

Fully removable, Putzmeister's modular bolt-on flatpack and hydraulic system combine versatility and servicing convenience. Pump cells can be switched out as jobs require or when maintenance is necessary. This feature also provides easier access to the S-Valve and shift cylinders.

10

Convenience and Control

The Frequency Hopping system on the standard HBC proportional radio remote ensures minimal interference with other frequency transmitters. Radiomatic Power Boost further enhances reception quality with a 50-100% increase in signal power. A fully proportional cable remote is also standard. Unlike other remote control systems, the radio and cable remote systems are completely independent, offering redundancies to ensure complete proportional operation with either the radio or cable remote in the event of a problem.

32Z-Meter

Truck-Mounted Concrete Boom Pump

Putzmeister

32Z-Meter

1

- 104' 6" (31.85m) vertical reach
- Up to 210 yd^3/hr ($160m^3$/hr) maximum output
- Versatile 4-section Multi-Z boom design
- 5" twin-wall delivery line
- Rack and pinion slewing system

Putzmeister BOOM PUMP ADVANTAGE

2

Rack and Pinion Slewing

The 32Z-Meter boom features a simple mechanical rack and pinion design for improved weight distribution and easy serviceability. Putting the pump closer to the cab, rack and pinion slewing offers greater reach than rotation bearings on lighter weight models. Specially designed teeth in the system offer smooth rotation and prevent backlash in the swing gears.

3

Fuel Economy

Switch gears and save with Putzmeister's patented Econo-Gear.™ The exclusive design allows the Mack chassis engine to run at a lower rpm, achieving less stress on wear parts, lower noise levels and reduced fuel consumption. Even when pumping a full load, Econo-Gear makes a significant impact on job site safety and profitability with an estimated 10-15% savings.

4

RS 907A Hopper

Putzmeister's EZ Clean Out RS 907A hopper is engineered for performance and easy maintenance. Offering 19.4 cu. ft. (550L) capacity, the hopper features hard-faced remixer paddles and vibrator. The unique design of the splash guard protects the unit from splattering during pumping and folds down and latches to cover the hopper during transit.

32Z-Meter

Truck-Mounted Concrete Boom Pump Standard Features

5

Boom

- 104' 6" (31.85m) vertical reach
- Low unfolding height
- Versatile 4-section Multi-Z boom
- Manual lubrication
- Integrated work lights

Delivery Line

- Equipped with 5" (125mm) twin-wall delivery line on all boom sections providing efficient concrete delivery
- Induction-hardened deck pipe with CCI turret elbow
- Easy lift-out brackets for simple delivery line replacement
- Standardized elbows and straight pipe sections
- Common component availability and easy replacement

Boom Operation and Control

- Fully proportional HBC radio remote
- Smooth and precise boom positioning at greater distances
- Fully proportional cable remote with 130' (40m) cable
- Gauge Port Central (GPC)
- Modular Boom Controls (MBC)
- 24V control box

Pedestal

- Rack and pinion slewing system for better weight distribution, smoother boom rotation and the potential for greater net reach
- Fully integrated pedestal design absorbs all forces
- Access opening simplifies changing turret pipe
- Easy access large single-suction filter with indicator gauge
- Condensation trap in the tank for water collection
- Two spacious decks for convenient pipe and hose storage
- Manual lubrication
- Side-mounted aluminum toolboxes
- Integrated work lights
- Breakaway rear steps

Outriggers

- Quick setup on restrictive job sites
- Fully hydraulic outriggers with integral cylinders
- Unique "X" brace outrigger system
- Front outriggers extend diagonally out and down
- Rear outriggers swing out and extend down
- Four outrigger pads in two side compartments
- Bubble level indicators

S-Valve

- Ideal for high pressure applications and harsh mixes
- Hard-faced S-Valve
- Gradual 9" to 7" (230 to 180mm) reduction
- Thick-walled valve construction
- Lasting wear over years of use

6

Concrete Pump

- Choose from high pressure or high volume with the same setup
- Free flow hydraulic system for smooth, controllable pumping
- Multi-piece piston cup design
- Automatic lubrication of the concrete pistons for long service life
- Hard-chromed material cylinders
- Redundant proximity sensor system with function indicators
- Fully adjustable volume control for very slow pumping with full concrete pressure and boom speed
- Modular pump control box

EZ Clean Out RS 907A Hopper

- Large 19.4 cu ft (550L) capacity
- Hard-faced remixer paddles
- Vibrator
- Hinged splash guard covers hopper during transit
- Low hopper height allows easy discharge from a mixer truck
- Automatic lubrication
- Integrated work lights

Clean Out

- Fast and easy clean out
- 406 psi (28 bar) hydraulically-driven water pump
- Wash out kit and hose
- Integrated 185 gallon (700L) water tank

7

Putzmeister PRO-VANTAGE® WARRANTY PLAN

The PRO-VANTAGE® Warranty Plan extends the coverage on all Putzmeister BSF boom pumps for a total of 36 months or 6,600 hours at no extra charge.

Exceptional Reach in a Lightweight Design

The 32Z-Meter boom pump offers great versatility in terms of reach and machine size. Its design features rack and pinion slewing for better weight distribution and smooth rotation of the boom. This simple and straightforward mechanical design prevents "backlash" in the swing gears and increases net reach by allowing pumping right in front of the cab. Like all Putzmeister boom pumps, the 32Z-Meter offers commonality of components for easy serviceability and convenient stocking of spare parts.

Putzmeister FREE FLOW HYDRAULICS

11

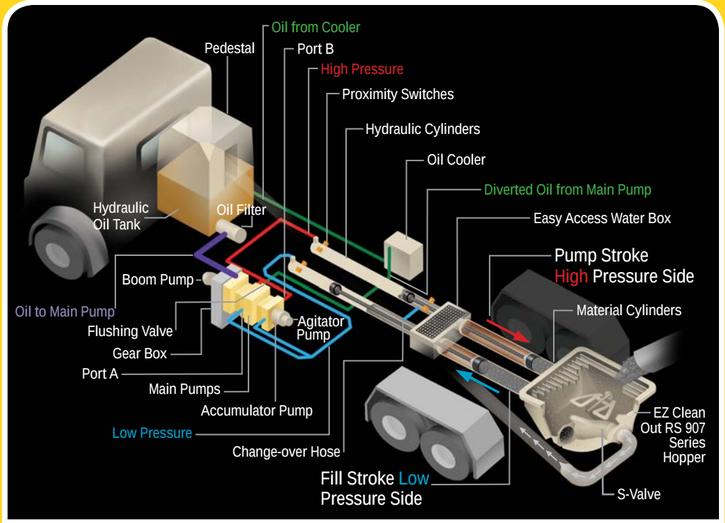

Putzmeister Free Flow Hydraulics in a Closed Loop System

The pumps at the heart of Putzmeister's free flow pumping system are bi-directional, variable displacement piston pumps. Depending on stroke, oil flows in a closed loop from either port A or port B on the pump to the hydraulic cylinders.

Depending on specific pump cell size, up to 20% of the oil leaves the simple closed loop system during each stroke through a flushing valve on the main pump and cycles to a cooler before it returns to the hydraulic oil tank. Removing and cooling only this minimal amount of oil is possible because, unlike an open loop system, the oil flows freely without passing through any unnecessary valves that can generate heat.

The closed loop also requires far less oil to run the system, as a larger reservoir is not necessary to cool all of the oil.

Speed and timing are also critical to superior performance. Quicker and more responsive than a hydraulic signal, the electrical system on a Putzmeister pump minimizes the time it takes to change direction at stroke end.

An electrical signal precisely synchronizes the drive cylinders with the accumulator system that controls the S-Valve in the hopper. Reserved energy in a nitrogen bladder sends a supercharged blast of oil at precisely the right moment to facilitate a smooth and fast shift of the S-Valve from one position to another.

Key Advantages of Putzmeister's Free Flow Hydraulics:

- Constant pressure on material in the delivery line ensures pumping is smooth and the flow of concrete is consistent.
- The intelligent design eliminates wear-inducing pressure peaks, increases service life and makes our pumps extremely powerful.
- There is greater pump output due to the efficient use of all available energy.
- Rapid changeover of the stroke means higher outputs, a smoother flow of concrete and less boom bounce.

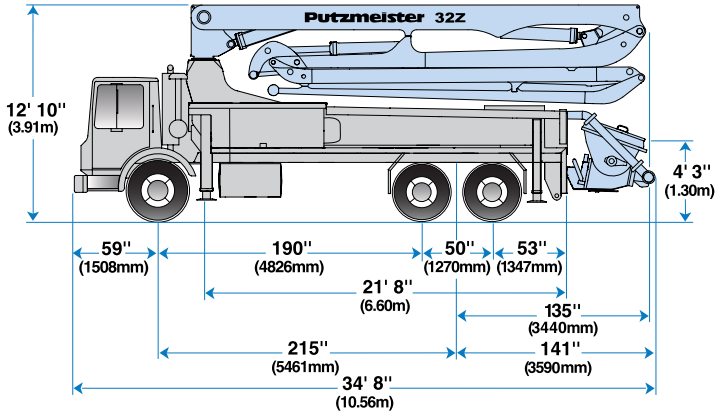

32Z-Meter Truck-Mounted Specifications

Based on Model MACK MRU 688S
with .16H pump cell

Length	34' 8"	(10.56m)
Width	8' 2"	(2.50m)
Height	12' 10"	(3.91m)
Wheelbase	215"	(5,461mm)
Front axle weight	19,561 lbs	(8,873kg)
Rear axle weight	34,684 lbs	(15,733kg)
Approx. total weight	54,245 lbs	(24,605kg)

Weights are approximate and include pump, boom, truck, full hydraulic oil, driver and some fuel. Varies with options selected.

Dimensions will vary with different truck makes, models and specifications.

Range Diagram

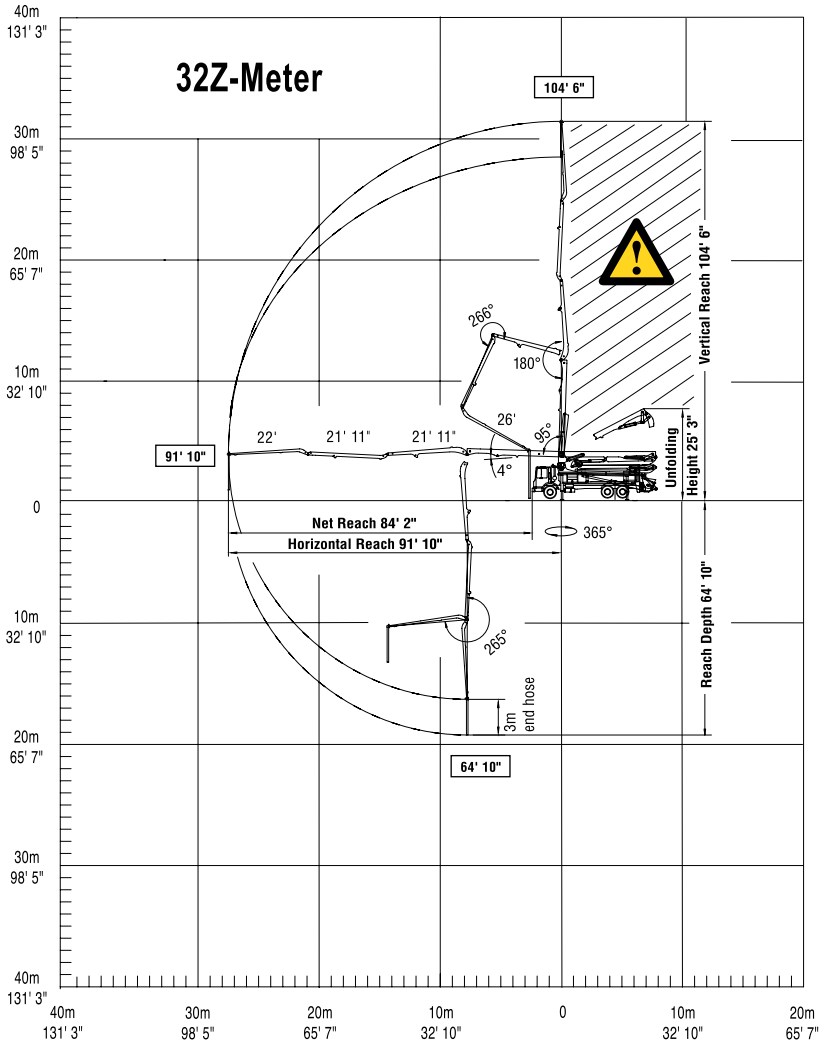

Boom Specifications • Multi-Z Design

Height & Reach		
Vertical reach	104' 6"	(31.85m)
Horizontal reach	91' 10"	(27.99m)
Reach from front of truck*	84' 2"	(25.67m)
Reach depth	64' 10"	(19.76m)
Unfolding height	25' 3"	(7.70m)
4-Section Boom		
1st section articulation	99°	
2nd section articulation	180°	
3rd section articulation	266°	
4th section articulation	265°	
1st section length	26'	(7.92m)
2nd section length	21' 11"	(6.68m)
3rd section length	21' 11"	(6.68m)
4th section length	22'	(6.71m)
General Specs		
Pipeline size (ID) metric ends	5"	(125mm)
Rotation		365°
End hose — length	10'	(3m)
End hose — diameter	5"	(125mm)
Outrigger spread L - R — front hydraulically extend out & down	18' 8"	(5.69m)
Outrigger spread L - R — rear hydraulically swing out & extend down	18' 8"	(5.69m)

Pump Specifications

		32Z.12L	32Z.16H
Output —	rod side	142 yd³/hr (109m³/hr)	210 yd³/hr (160m³/hr)
	piston side	85 yd³/hr (65m³/hr)	146 yd³/hr (112m³/hr)
Pressure —	rod side	1015 psi (70 bar)	1233 psi (85 bar)
	piston side	1624 psi (112 bar)•	1885 psi (130 bar)•
Material cylinder diameter		9" (230mm)	9" (230mm)
Stroke length		83" (2100mm)	83" (2100mm)
Max strokes per minute —			
	rod side	21	31
	piston side	13	21
Volume control		0-Full	0-Full
Vibrator		Standard	Standard
Hard-chromed material cylinders		Standard	Standard
Hydraulic system		Free Flow	Free Flow
Hydraulic system pressure		5075 psi (350 bar)	5075 psi (350 bar)
Differential cylinder diameter		5.1" (130mm)	5.5" (140mm)
Rod diameter		3.1" (80mm)	3.1" (80mm)
Maximum size aggregate		2.5" (63mm)	2.5" (63mm)
Water tank		185 gal (700L)	185 gal (700L)

Maximum theoretical values listed.
* Applies to units mounted on PMA stock truck — MACK MRU 688S
• Standard delivery line system rated at max line pressure of 1233 psi (85 bar)

⚠ End hose not to be operated in caution area.

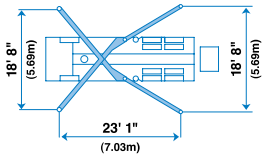

Photos and drawings are for illustrative purposes only.
For available options, please refer to price list.

Authorized Distributor

Putzmeister

Putzmeister America, Inc.
1733 90th Street
Sturtevant, WI 53177 USA
Telephone (262) 886-3200
(800) 884-7210
Facsimile (262) 884-6338
www.putzmeister.com

QUALITY SYSTEM CERTIFIED ISO 9001:2000

Right to make technical amendments reserved. © Putzmeister America, Inc. 2007
Printed in USA (3.50701)